GIULINI G.
RUBINETTERIA

NEW

100% MADE IN ITALY
IT01

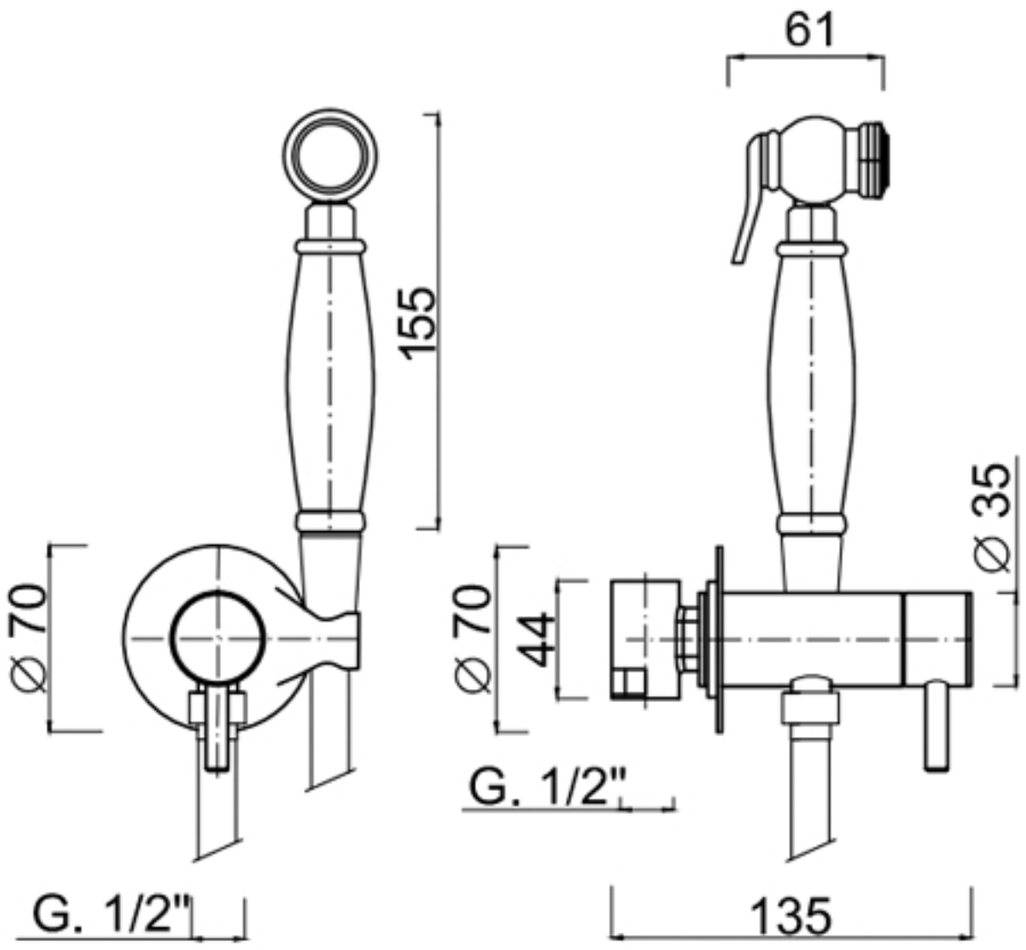

212 €

436 €

350 €